北京威浦实信科技有限公司
Beijing VP Co.,Ltd.

Office Address: Room A 1201, Tahoe Changan Center,Lugu Road 51#,
Beijing China. 100040
Office: +86-10-68288842/68183911/68219834
Mobile: +86-13701304357/13701060411/13811259460
Fax: +86-10-68219842

Factory Address: No.18, Wen'an Economic Development Zone, Langfang, Hebei, China
Singapore Representative Office：1 Paya Lebar Link,#04-01, Paya Lebar Quarter 1,Singapore 408533
Direct line: +65 6955 8492
Mobile: +65 91188003
E-mail: singaporeoffice@bjvp.com jsgou@bjvp.com
Web: www.bjvp.com

www.bjvp.com

VP Gear Pump

北京威浦实信科技有限公司
Beijing VP Co.,Ltd.

High viscosity product transfer
Good self-priming capability
Universal seal optiomal

Pump clearance adjustable
Jacketed,non-jacket,electric heating
Magnetic drive interchangeable

Flowrate: Max.363 m^3/h
Pressure: 0~17 Bar
Temperature: -85°C~430°C
Viscosity: 0.1 mPa.s~440,000 mPa.s (cst)

Internal Gear Pump That Truly Meet The API676 Standard

Pump Construction and Features

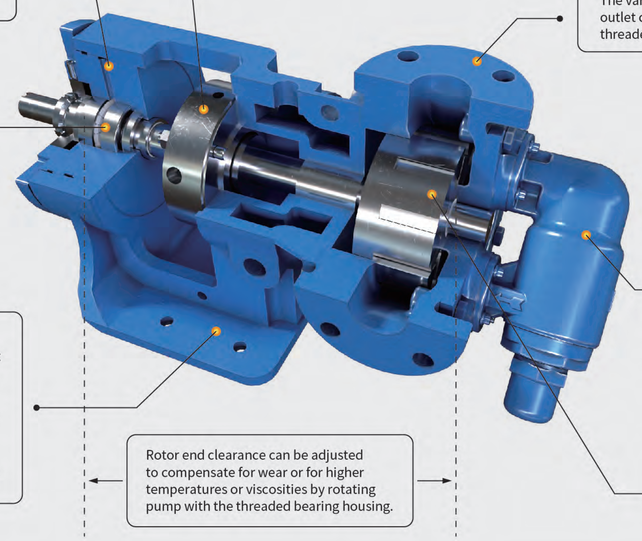

Seal Type Option:
1-High temperature packing seal
2-High strength graphite packing seal
3-Food grade packing seal
4-Component type mechanical seal: Single seal,double seal
5-Cartridge type mechanical seal: Single seal,double seal
6-Cartridge type high performance three lip seal
7-Magnetic sealless

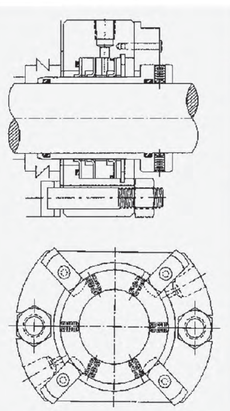

Cartridge type three lip seal

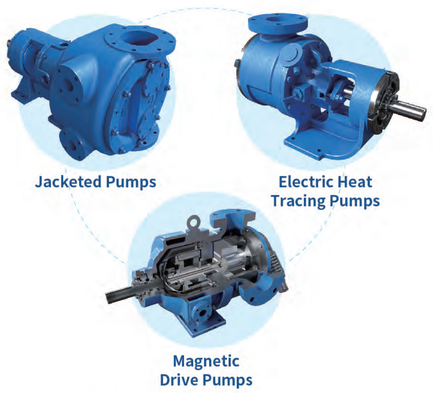

A variety of seal flushing options are available:
Plan11,Plan13,Plan32,Plan52,53,54.ect

All U series pumps are equipped with pump casings that can be positioned to meet common piping configurations.
Smaller size pump has standard 90° ports ,180° ports available in some materials.
6" and above size pump has standard 180° ports.
Direction of flow is reversible so any given port can be used as suction or discharge.
See Optional Casings tables for available port options.

Plug-in Electric Heating Pump

Structure Features:

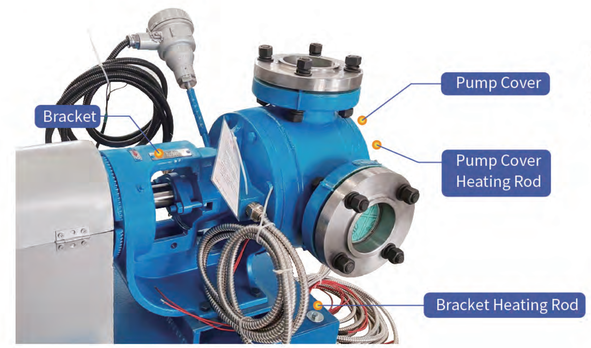

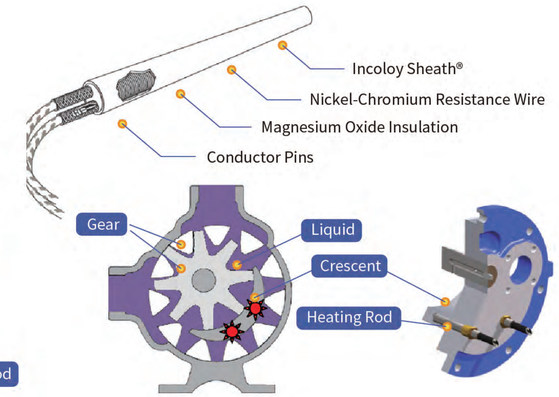

Application:

Electric heating pump can replace steam or hot oil jacket casing, provide the most efficient heating for the solidification product.

Automatic Temperature Control:

Heating temperature can be set from local or remote controller. The temperature sensor and controller communication can maintain the pump temperature at the setting point. Maximum 250 ℃

API676 Standard Pumps

A pump truly meets with API 676 standard.
API 682 standard seal can be installed at U series pump.
The enlarged bearing housing for easy disassembly and maintenance.
The good choice for heavy duty application.

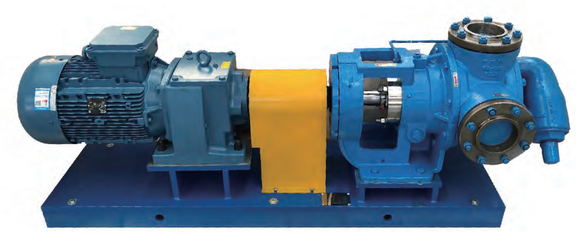

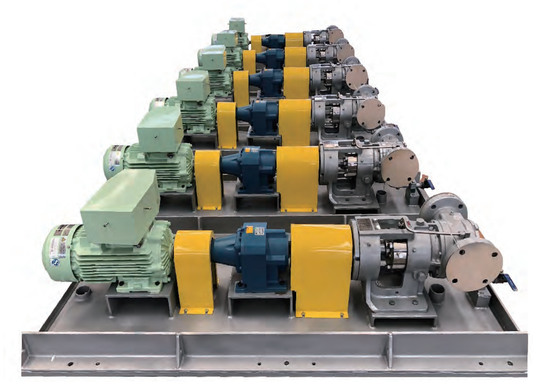

- **Non-jacket pump:**
  Widely used in big changes of viscosity,high viscosity ,heavy duty application fluid.
- **Jacketed pump:**
  Widely used in the fluid that need to be heated at high temperature or keeping at some temperature application.
- **Application industries:**
  Lubricants,polymers,chemical fibers,resins,petroleum,asphalt,binders,fuel oil,gluse,paints,coatings food,pulp,detergents and various chemicals,etc.
- **Working range:**
  Flowrate: Max. 363m³/h
  Pressure: 0~17Bar
  Temperature: -85℃~430℃
  Viscosity: 0.1 mPa.s~440,000mPa.s (cst)

Performance Data

Model No.		Port Size	Process Parameters	Flow (m³/h)	Speed (RPM)	Shaft Power (kw)	Viscosity (cst)	Temperature (°C)	Diff.Pre (Bar)	Weight(KGS)	
Model	Size	inch								Bare Pump	Pump Unit
UF	40	1.5	Work Scope	0.5-3.6	84-1450	0.1-2.2	0.1-440,000	-85~430	0-17	17	80
			Norminal Value	2.1	950	1.55	2,000	200	8		
UH	40	1.5	Work Scope	1-7.3	125-1450	0.3-3.6	0.1-440,000	-85~430	0-17	20	95
			Norminal Value	4	950	2.24	2,000	200	8		
UN	50	2	Work Scope	2-13.6	56-750	0.75-5.3	0.1-440,000	-85~430	0-17	48	150
			Norminal Value	8.2	350	3.15	2,000	200	8		
UNN	50	2	Work Scope	2-23	84-750	0.75-12.5	0.1-440,000	-85~430	0-17	55	165
			Norminal Value	10.5	343	3.65	2,000	200	8		
UP	50	2	Work Scope	3-33.6	56-640	0.75-15	0.1-440,000	-85~430	0-17	70	250
			Norminal Value	18	346	7.76	2,000	200	8		
UQ	65	2.5	Work Scope	3-33.6	56-640	0.75-15	0.1-440,000	-85~430	0-17	80	290
			Norminal Value	18.2	350	7.87	2,000	200	8		
UR	80	3	Work Scope	3-34	84-520	0.75-16.5	0.1-440,000	-85~430	0-17	84	340
			Norminal Value	23	355	9	2,000	200	8		
US	80	3	Work Scope	6.8-50	48-600	1-18.5	0.1-440,000	-85~430	0-17	91	380
			Norminal Value	28	358	9.55	2,000	200	8		
UT	100	4	Work Scope	6-68	84-520	1-26.3	0.1-440,000	-85~430	0-17	200	560
			Norminal Value	45	312	17.7	2,000	200	8		
UU	150	6	Work Scope	18-110	50-350	3.75-37.5	0.1-440,000	-85~430	0-17	250	650
			Norminal Value	70	325	24	2,000	200	8		
UW	150	6	Work Scope	22-135	84-410	7.5-56	0.1-440,000	-85~430	0-17	367	800
			Norminal Value	100	230	39	2,000	200	8		
UWL	150	6	Work Scope	30-208	40-280	18-101	0.1-440,000	-85~430	0-17	367	800
			Norminal Value	150	202	69	2,000	150	8		
UX	200	8	Work Scope	25-250	56-280	18-112.5	0.1-440,000	-85~430	0-17	651	1300
			Norminal Value	200	220	82.5	2,000	150	8		
UY	250	10	Work Scope	45-363	56-280	25-135	0.1-440,000	-85~430	0-9	1220	2100
			Norminal Value	250	230	113	2,000	150	8		

① Temperature range: C.I: -51℃~343℃, C.S: -29℃~450℃, S.S: -84℃~260℃
② Pump inlet and outlet connection type: NPT, ANSI125#F.F ANSI150#F.F ANSI250#F.F ANSI300#F.F
③ Hydraulic pressure test: 32Bar
④ For the model of high temperature pump, add "H" after U series
⑤ Pump model description: Jacket pump + "J", electric heat tracing pump + "E", 682 pump + "AA"

U Series Non-jacketed Pump Dimension Drawing

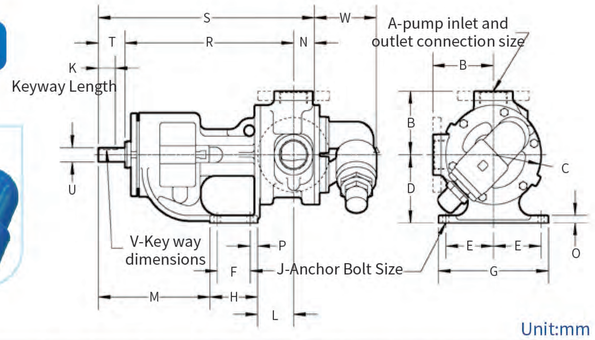

Unit:mm

Model	A	B	C	D	E	F	G	H	J	K	L	M	N	O	P	R	S	T	U	V	W
UF-40 UH-40	1.5" NPT	76.2	120.6	88.9	69.8	57.1	171.4	88.9	11.9	25.1	85.8	131.8	30.2	14.2	15.7	265.2	336.5	41.1	19	4.83 x 2.29	72.4
	1.5"ANSI 150#F.F	101.6																			
UN-50 UNN-50	2" NPT	130	203.2	139.7	101.6	69.8	234.9	101.6	13.5	36.1	76.2	238.3	44.4	15.7	15.7	358.6	460.2	57.1	28.4	6.35 x 3.05	133.3
	2"ANSI 150#F.F	133.3																			
UP-50	2" NPT	165.1	260.3	177.8	111.3	101.6	254	136.7	13.5	50.8	85.9	231.6	44.4	15.7	15.7	396.7	498.3	57.1	28.7 36.6	6.35* x 3.05	137.9
UQ-65	2.5"ANSI 125#F.F	182.6	260.3	177.8	111.3	101.6	254	136.7	13.5	50.8	85.9	231.6	44.4	15.7	15.7	396.7	498.3	57.1	28.7 36.6	6.35* x 3.05	137.9
	2.5"ANSI 150#F.F																				
UR-80	3"ANSI 125#F.F	182.6	260.3	177.8	111.3	101.6	254	136.7	13.5	50.8	85.9	231.6	57.1	15.7	15.7	396.7	511	57.1	28.7 36.6	6.35* x 3.05	137.9
	3"ANSI 150#F.F																				
US-80	3"ANSI 125#F.F	182.6	260.3	177.8	111.3	101.6	254	136.7	13.5	64.8	120	231.6	62	15.7	15.7	400	550.9	88.9	36.6	9.65 x 4.83	137.9
	3"ANSI 150#F.F																				
UT-100	4"ANSI 125#F.F	209.5	335.6	222.2	104.6	101.6	254	152.4	17.5	90.9	168.1	282.4	76.2	19	25.4	488.9	679.4	114.3	49.3	12.7 x 6.35	209.5
	4"ANSI 150#F.F																				

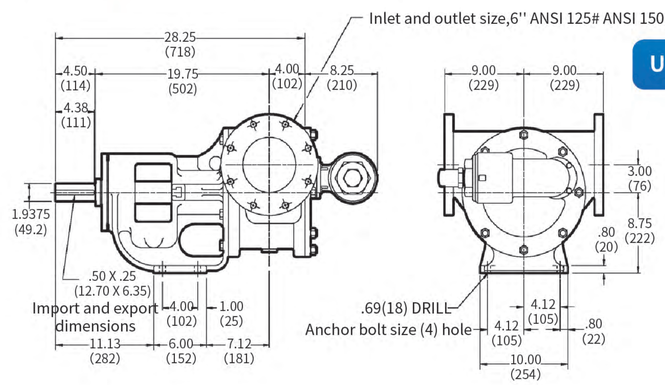

UU Size Non-jacketed Pump Dimension Drawing

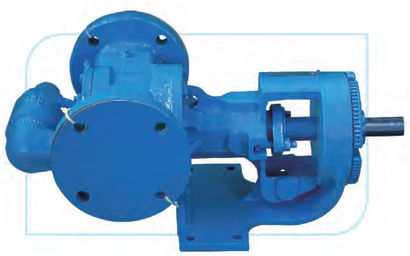

UU Jacketed Pump Dimension Drawing

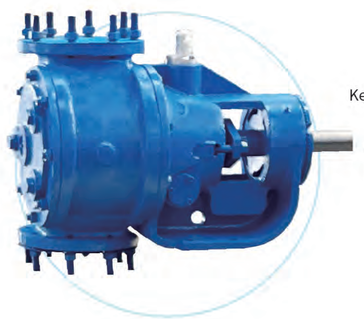

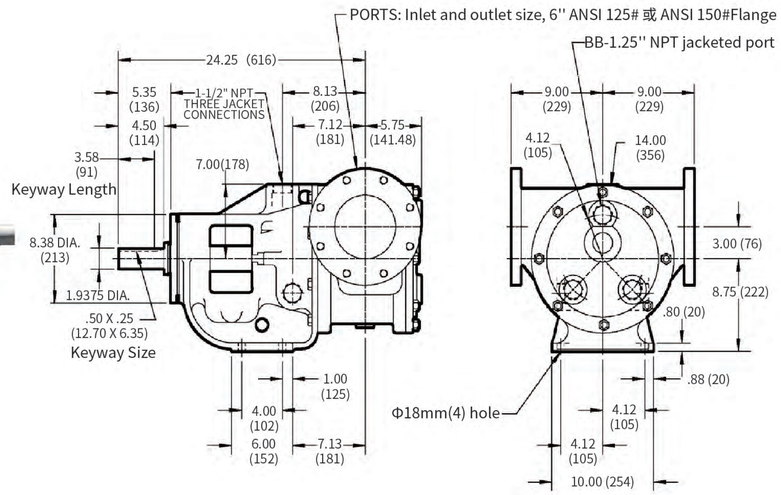

UW UX UY Bare Pump Dimension Drawing

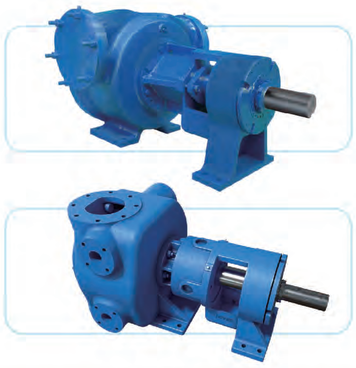

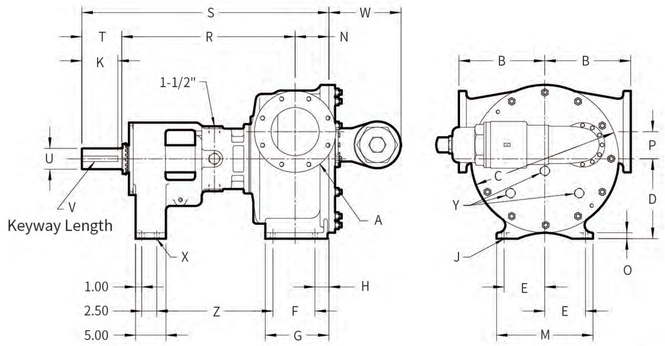

Unit:mm

Model		A	B	C	D	E	F	G	H	J	K	M	N	O	P	R	S	T	U	V	W	X	Y	Z
U	W-150	6"ANSI 125#F.F 6"ANSI 150#F.F	248	438	241	127	158	220	41.1	17.5	114.3	304	114.3	25.4	76.2	660	927.1	152	62	15.7 x 7.87	219	17.5	-	481
U	WL-150	6"ANSI 125#F.F 6"ANSI 150#F.F	330	560	336.6	171.5	178	267	52.5	20	152	419	133.5	28.5	108	727	1028	167	87.3	22.3 x 11.18	224	22	1"NPT	480.8
U	X-200	8"ANSI 125#F.F 8"ANSI 150#F.F	361	622	336	171	177	268	58.7	19.8	152	406	142	25.4	114.3	730	1041	168	87.4	22.3 x 11.18	304	17.5	31.7	488.9
U	Y-250	10"ANSI 125#F.F 10"ANSI 150#F.F	361	622	336	171	177	333	122	22	152	418	206	33	114.3	725	1104	168	87.4	22.3 x 11.18	304	22	31.7	488.9

U Series Jacketed Bare Pump Dimension Drawing

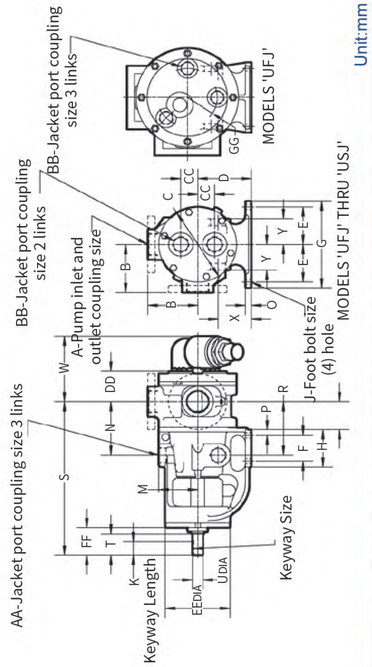

Unit:mm

Model	A	B	C	D	E	F	G	H	J	K	L	M	N	O	P	R	S	T	U	V	W	X	Y	AA	BB	CC	DD	EE	FF
UFJ-40 UHJ-40	1.5" NPT	76.2	120.6	88.9	69.8	57.1	171.4	88.9	11.9	25.1	85.8	60.5	101.6	14.2	15.7	101.6	306.3	41.1	19	4.83 x 2.29	102.6	45.7	46.5	19	12.7	23.9	61.2	146	58.4
	1.5"ANSI 150#F.F	101.6																											
UNJ-50 UNNJ-50	2" NPT	130	203.2	139.7	101.6	69.8	234.9	101.6	13.5	36.1	76.2	101.6	146	15.7	15.7	146	416	57.1	28.4	6.35 x 3.05	177.8	85.9	69.8	31.7	31.7	44.4	82.5	171.4	74.2
	2"ANSI 150#F.F	133.3																											
UPJ-50	2" NPT	165.1	260.3	177.8	111.3	101.6	254	136.7	13.5	50.8	85.9	130	166.6	15.7	15.7	166.6	454.2	57.1	28.4	6.35* x 3.05	182.4	117.3	82.5	31.7	25.4	76.2	96.8	171.4	74.4
UQJ-65	2.5"ANSI 125#F.F	182.6	260.3	177.8	111.3	101.6	254	136.7	13.5	50.8	85.9	130	166.6	15.7	15.7	166.6	454.2	57.1	28.4	6.35* x 3.05	182.4	117.3	82.5	31.7	25.4	76.2	96.8	171.4	74.4
	2.5"ANSI 150#F.F																												
URJ-80	3"ANSI 125#F.F	182.6	260.3	177.8	111.3	101.6	254	136.7	13.5	50.8	85.9	130	166.6	15.7	15.7	166.6	454.2	57.1	28.4	6.35* x 3.05	182.4	117.3	82.5	31.7	25.4	76.2	109.5	171.4	74.4
	3"ANSI 150#F.F																												
USJ-80	3"ANSI 125#F.F	182.6	260.3	177.8	111.3	101.6	254	136.7	13.5	64.8	120.6	130	188	15.7	15.7	177.8	488.9	88.9	36.58	9.65 x 4.83	196.1	111.8	83.8	31.7	25.4	76.2	114.3	177.8	102.4
	3"ANSI 150#F.F																												
UTJ-100	4"ANSI 125#F.F	209.6	355.6	222.2	104.6	101.6	254	152.4	17.5	90.9	168.1	177.8	193.5	19	25.4	168.1	603.2	114.3	49.3	12.7 X 6.35	285.7	139.7	114.3	38.1	31.7	-	116.1	212.8	135.9
	4"ANSI 150#F.F																												